DRILLING AND MILLING HEAD, RADIAL 90°, ER25, INTERNAL & EXTERNAL COOLANT SUPPLY

NOTE:
1. INTERNAL COOLANT=100BAR MAX (FOLLOW OPERATING DATA CHART)
2. SUITABLE FOR COLLET DIN6499
3. COLLET NOT INCLUDED
4. **DRY RUN IS ALLOWED**
5. **COOLANT FILTRATION *30µ (MAX60µ)***

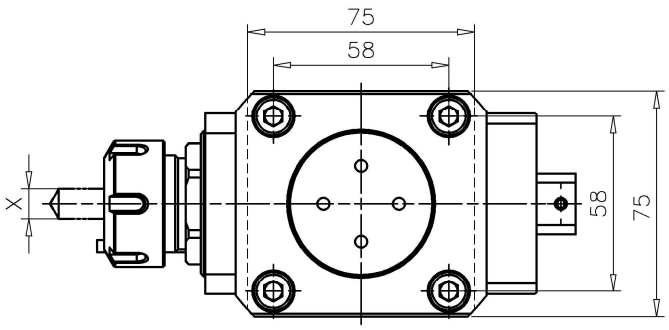

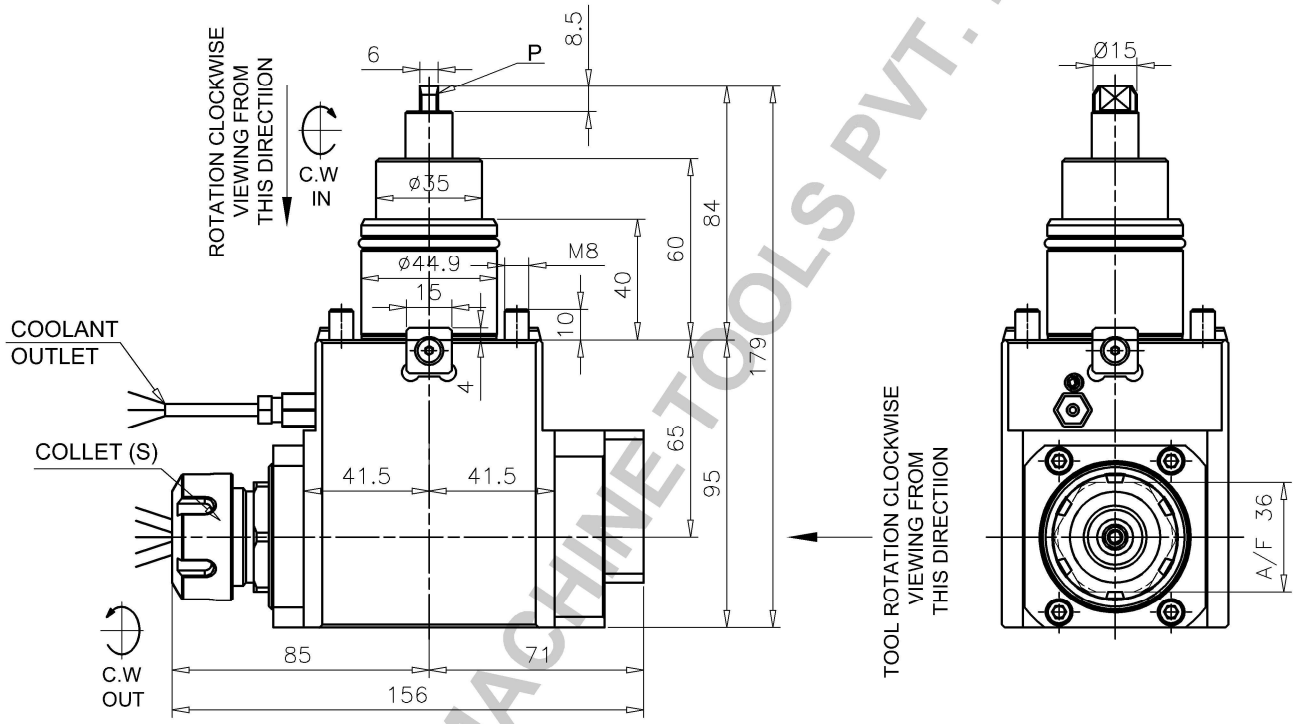

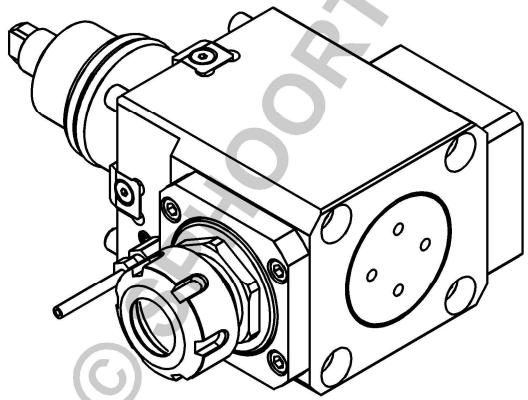

TECHNICAL SPECIFICATIONS

ITEM ID	SD7033
ITEM DESCRIPTION	B45–RTH–ER25–CH–65–DIN1809 EXT NUT–TC
COUPLING TYPE (P)	DIN1809–Ø14.5X6X8.5
RATIO	1:1
INPUT RPM	Max 6000 RPM
OUTPUT RPM	Max 6000 RPM
OUTPUT TORQUE	25 N–m
DIRECTION OF ROTATION	INPUT=OUTPUT
COLLET (S)	ER25 (DIN6499)
COLLET RANGE (X)	ø1–ø16
MASS OF TOOL HOLDER	4.8 Kgs

© SPHOORTI MACHINE TOOLS PVT. LTD.

Scale	Title		Drawn	Approved	Projection
1:2.5	B45-RTH-ER25-CH-65-DIN1809 EXT NUT-TC	by	SATHISH	SATHISH	
Size A4		date	05–02–2024	05–02–2024	

SPHOORTI

SPHOORTI MACHINE TOOLS PVT LTD
BANGALORE–560058

DRAWING NO: SD7033

No.of Sheets 01 | Sheet No. 01